Micrometer Head

The origin of Mitutoyo's trustworthy brand of small tool instruments

Micrometer Heads
SERIES 148 — Small Standard Type

B

DIMENSIONS

Stem Locknut Mass: 35 g

Unit: mm

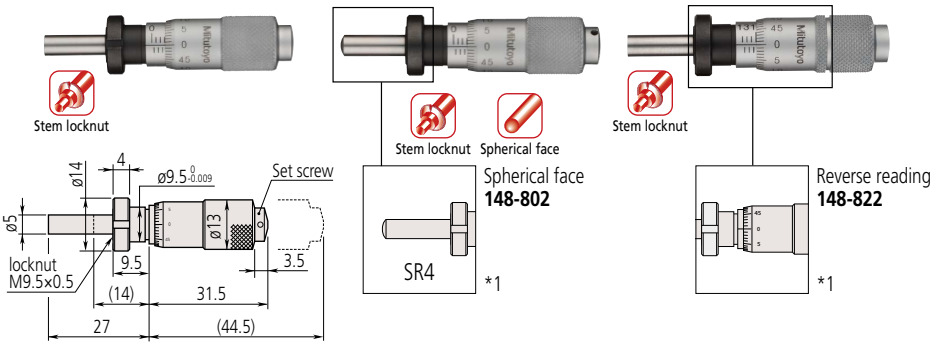

• Fixture thickness: 6 mm
148-103

*1 Other dimensions are the same as **148-103**.

Stem Locknut and Spindle Lock Mass: 45 g

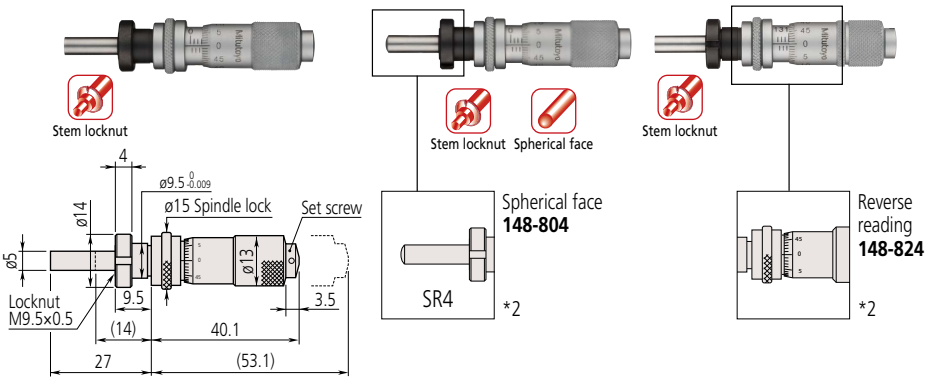

• Fixture thickness: 6 mm
148-120

*2 Other dimensions are the same as **148-120**.
( ): with spindle fully retracted.

Mitutoyo reserves the right to change any or all aspects of any product specification, including prices, designs and service content, without notice.